READYWIRE

#1 Al Sol TRXLPE 25kv/100% 13x14 C/N LLDPEJ



Industry compliances: CSA Standard C68.5

Description: MV concentric neutral cable 1c #1 Solid al 25kv/100% TRXLPE 13x14 C/N PVC jacket

- Single conductor 1 AWG Class B compact aluminum with water blocked strand.
- Semi-conducting, thermoset conductor shield
- TR-XLPE insulation, 25 kV 100%
- Semi-conducting, thermoset insulation shield
- 13 - 14 AWG solid bare copper concentric neutral wires (Full C/N)
- Separator tape
- Black LLDPE jacket with 3 red stripes

Application

- MV C/N cables are used primarily by the transmission, distribution utilities and contractor companies to transport MV electricity loads underground from transformer stations to step-down distribution transformers located in our towns and city neighborhoods. These electrical infrastructure cables support the electrical grid that feeds medium voltages that feed our low voltage (600v) distribution systems.

Features

- Triple extrusion for more reliable performance
- Water blocked strand
- Rugged LLDPE jacket for increased mechanical protection
- 3 red stripes for ease of identification
- Fortis Alberta specifications

READYWIRE

#1 Al Sol TRXLPE 25kv/100% 13x14 C/N LLDPEJ

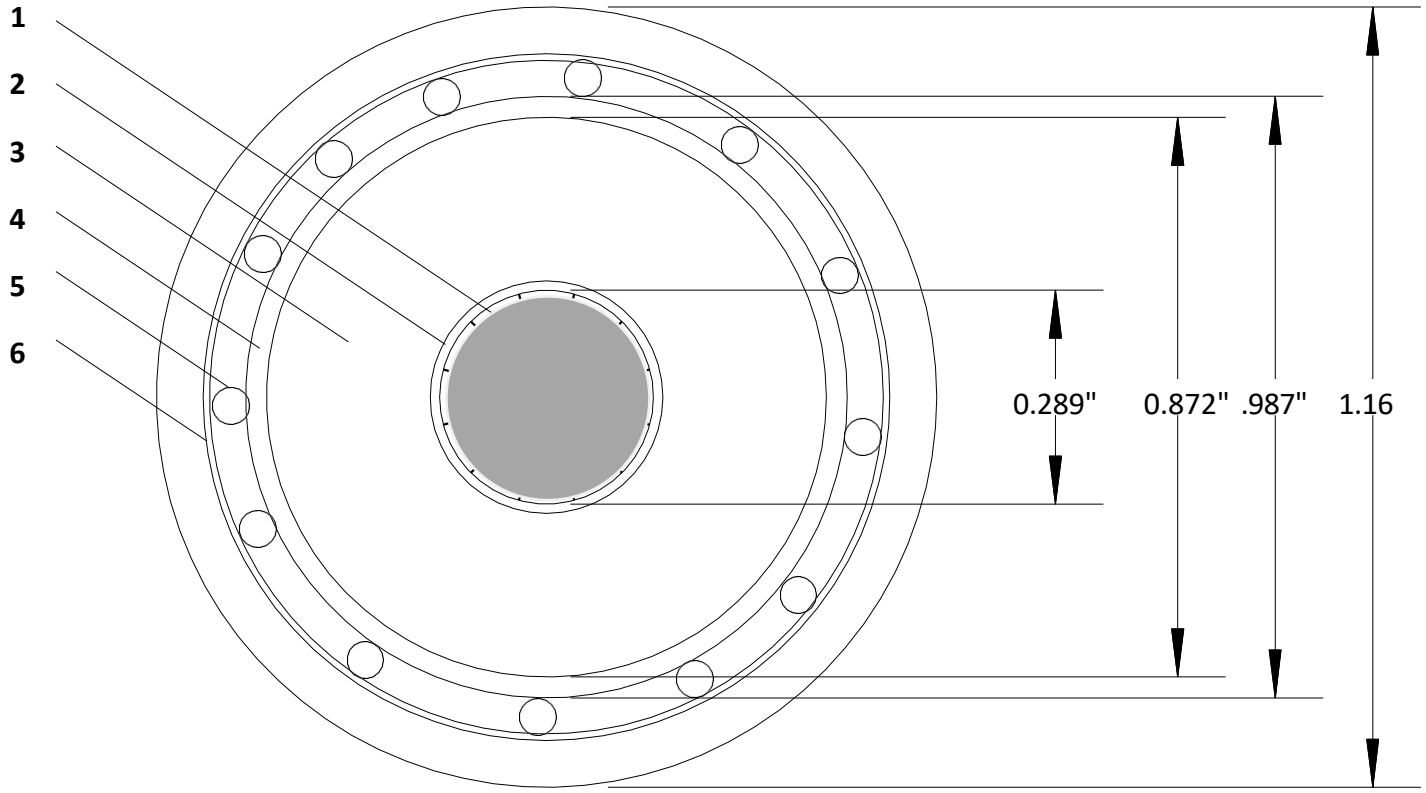

Spec: CSA C68.5

Cable Weight: 1.41 kg/m

1. 1 AWG Class B compact aluminum with Water blocked strand
2. Semi-conducting, thermoset, supersmooth conductor shield 12 mils minimum point
3. TR-XLPE insulation, 25 kV 100% 245 mils minimum point 260 mils nominal 290 mils maximum point
4. Semi-conducting, thermoset insulation shield 30 mils minimum point 60 mils maximum point
5. 13 - #14 AWG bare copper concentric neutral wires with water-swellable powder
6. Black encapsulating linear low density polyethylene jacket 45 mils minimum point 80 mils maximum point

Cable weights and dimensions are nominal and subject to normal manufacturing tolerances. Subject to change without notice